| | REVISED | DR | APP |
|---|---|---|---|
| | | | |
| | | | |

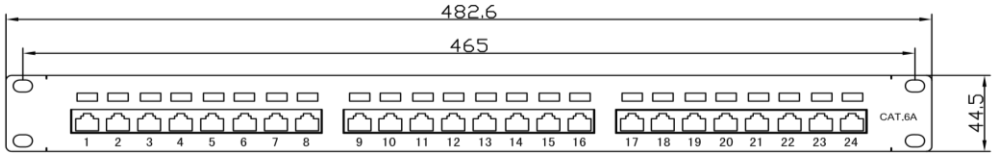


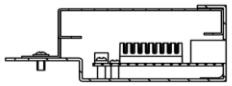

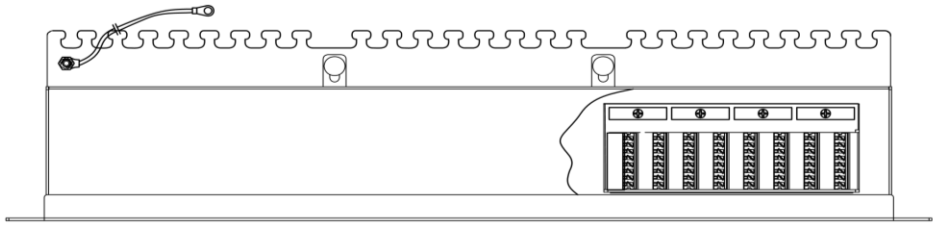

Specification:
Material:
1.Metal frame: SPCC.
Gray:ARL7035
2. Plastic Housing :ABS
3.RJ45 contact material & finished:
3-1.Phosphor Bronze with Nickel plated.
3-2.Contact area : Gold plated.

4.IDC Housing: PC
5.IDC Terminal material & finished:
5-1.Phosphor Bronze with Tin plated.
5-2. Krone&110 tool compatible.
5-3. Suitable for 22-26 AWG stranded and solid wire.

Performance:
a.The sticker color codes combine two wirings of T568A & T568B.
b.Insertion Force: 900 gms for 8 contacts.
c.Retention Strength: 7.7 kgs between Jack and Plug.
d.Operation Temperature: -30。 to 60。.

e.Durability:
e-1. Jack : 750 cycles Plug-Jack mating and unmating test, Insertion cycles at 20 cycles/minute max. Contact resistance test per 100 cycles.
e-2. IDC : Max. 200 punching times.
f.The Cat.6A performance is in complince with the ANSI/TIA/EIA 568 C.2 standard.

CAT6A 500 MHz

RoHS compliant

S-Conn Handels GmbH
Am Mühlberg 8
91477 Markt Bibart
Tel. 09162/ 98 93 8-0
Fax 09162/ 98 93 8-20
info@s-conn.de
S/CONN
maximum connectivity
www.s-conn.de

| DESCRIPTION | | | | | | | |
|---|---|---|---|---|---|---|---|
| | | | **PATCHPANEL 24 PORT CAT 6A, GREY** | | | | |
| SIZE | A4 | DATE | 13.01.2016 | CHECKED | | TOL | **75078** |
| UNIT | MM | DRAWN | R.Hueller | APPROVED | | | |
| CUSTOM TARIF NO.: 84718000 | | | | | | | |

| REVISED | DR | APP |
|---|---|---|
| | | |

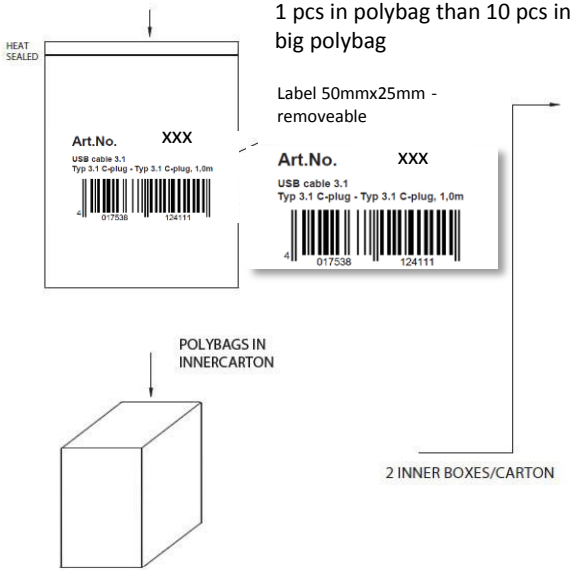


1 pcs in polybag than 10 pcs in big polybag

Label 50mmx25mm - removeable

Art.No. XXX
USB cable 3.1
Typ 3.1 C-plug - Typ 3.1 C-plug, 1,0m
017538 124111

2 INNER BOXES/CARTON

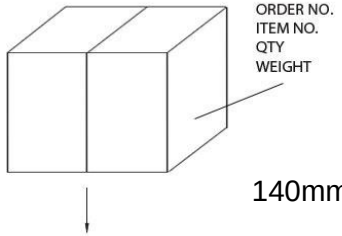

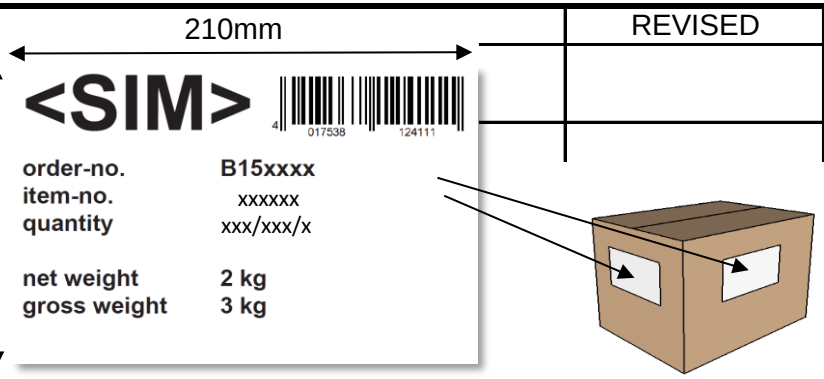


Max. 15 kg.

Note: Connectors must be Inside Cable Rolling

Only use strong Cartons with printed letters
Handwritten not allowed !!!

| ART.NO. | LENGTH | ROLLING SIZE | NET.WEIGHT (g) | PACKING | EAN CODE |
|---|---|---|---|---|---|
| 75078 | x | 500x130x55 mm | 1692 g | 1 pcs in Gift Box than 10 in EXPORT CARTON | 4017538108975 |
| | | | | | |
| | | | | | |
| | | | | | |
| | | | | | |
| | | | | | |
| | | | | | |
| | | | | | |
| | | | | | |
| | | | | | |
| | | | | | |
| | | | | | |

S-Conn Handels GmbH
Am Mühlberg 8
91477 Markt Bibart
Tel. 09162/ 98 93 8-0
Fax 09162/ 98 93 8-20
info@s-conn.de
S/CONN
maximum connectivity
www.s-conn.de

| DESCRIPTION | PATCHPANEL 24 PORT CAT 6A, GREY | | | | | | |
|---|---|---|---|---|---|---|---|
| SIZE | A4 | DATE | 13.01.2016 | CHECKED | | TOL | 75078 |
| UNIT | MM | DRAWN | R.Hueller | APPROVED | | | |
| CUSTOM TARIF NO.: 84718000 | | | | | | | |